Technical Data	B-Servo 4013	B-Servo 2090	B-Servo 2060
Bending Length (B) (mm)	1300	900	600
Bending Capacity (ton)	40	20	20
Daylight (Q) (mm)	375	375	375
Maximum Stroke (mm)	150	150	150
Y Axis (Approaching/Bending/Return) Velocity (mm/sec)	150/20/150	150/20/150	150/20/150
Motor Power (kW)	2x3,8	3,8	3,8
Lenght (A) (mm)	1880	1280	1280
Width (C) (mm)	2435	1760	1410
Height (D) (mm)	2320	2190	2190
Weight (Appr.) (kgs)	3400	2000	1700

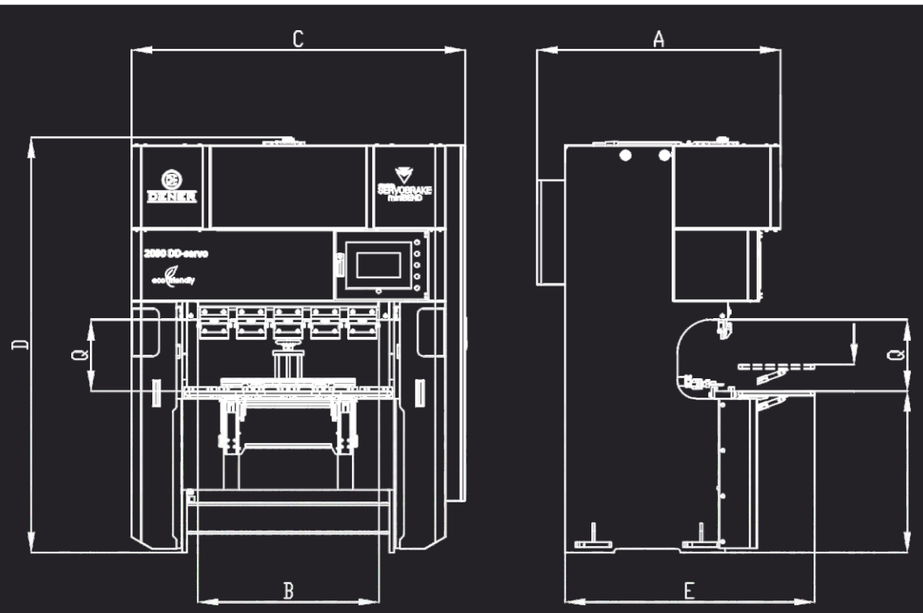

Organize Sanayi Bölgesi
8.Cadde No:40-42 38070
Melikgazi / Kayseri / TÜRKİYE

DENER

+90 352 321 13 50
+90 352 321 13 53
info@dener.com
www.dener.com

www.dener.com

DENER

BALL-SCREW PRESS BRAKE

Compact Bending Solutions with High Efficiency

BALL-SCREW PRESS BRAKE

Single / Dual Lenze drive technology

- Enegry saving up to 50%
- High speed bending produces more parts per hour
- Low maintenance cost
- High accuracy positioning and repeatability
- Light and compact design

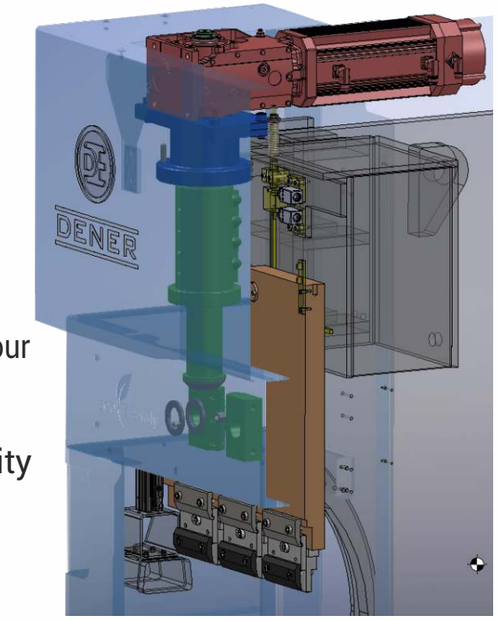

B-Servo 4013

B-Servo 2090

B-Servo 2060

Control Unit

ESA S 630 Control Unit

- 10" color touch screen
- Automatic bend sequence
- Easy programmable 2D graphic display.
- Up to 4 axes (Y1,Y2, X and R)
- Multiple language options
- 2D Simulation
- Remote access

ESA S 660 3D Control Unit (Optional)

Back Guage

- 2 axis back gauge handles complex parts with ease. (5 axis optional - Z1, Z2 and X-Prime with ESA660 controller)
- High speed movement combined with high accuracy drives ensures the back gauge is positioned quickly and precisely every time for the operator.

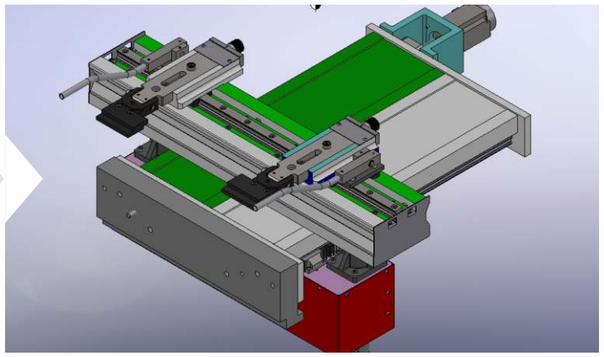

Work Table (Optional)

Foldable and height adjustable ergonomic working table makes bending easier and comfortable.

Safety System

Front laser finger protection system with safety PLC (Optional).

Other Advantages

- Electrical cabinet cooler
- Easier box bending with larger open height
- Quick installation and transportation

Clamping & Tools

Euro Type punch and die clamping systems.

Wila mechanical and hydraulic clamping system (Optional)

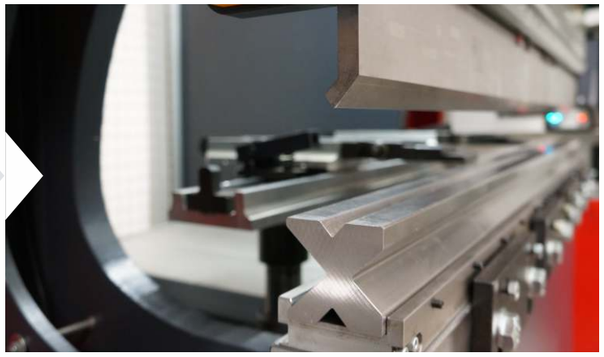

Body Frame

Solid monoblock body with small C frame gap provide high precision on bending.

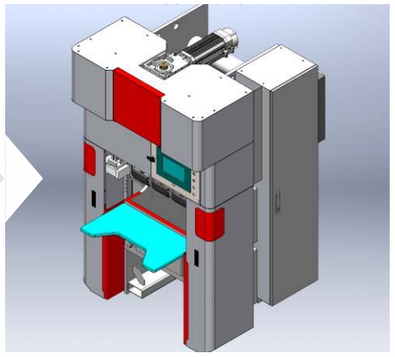

NO HYDRAULIC OIL CYLINDERS